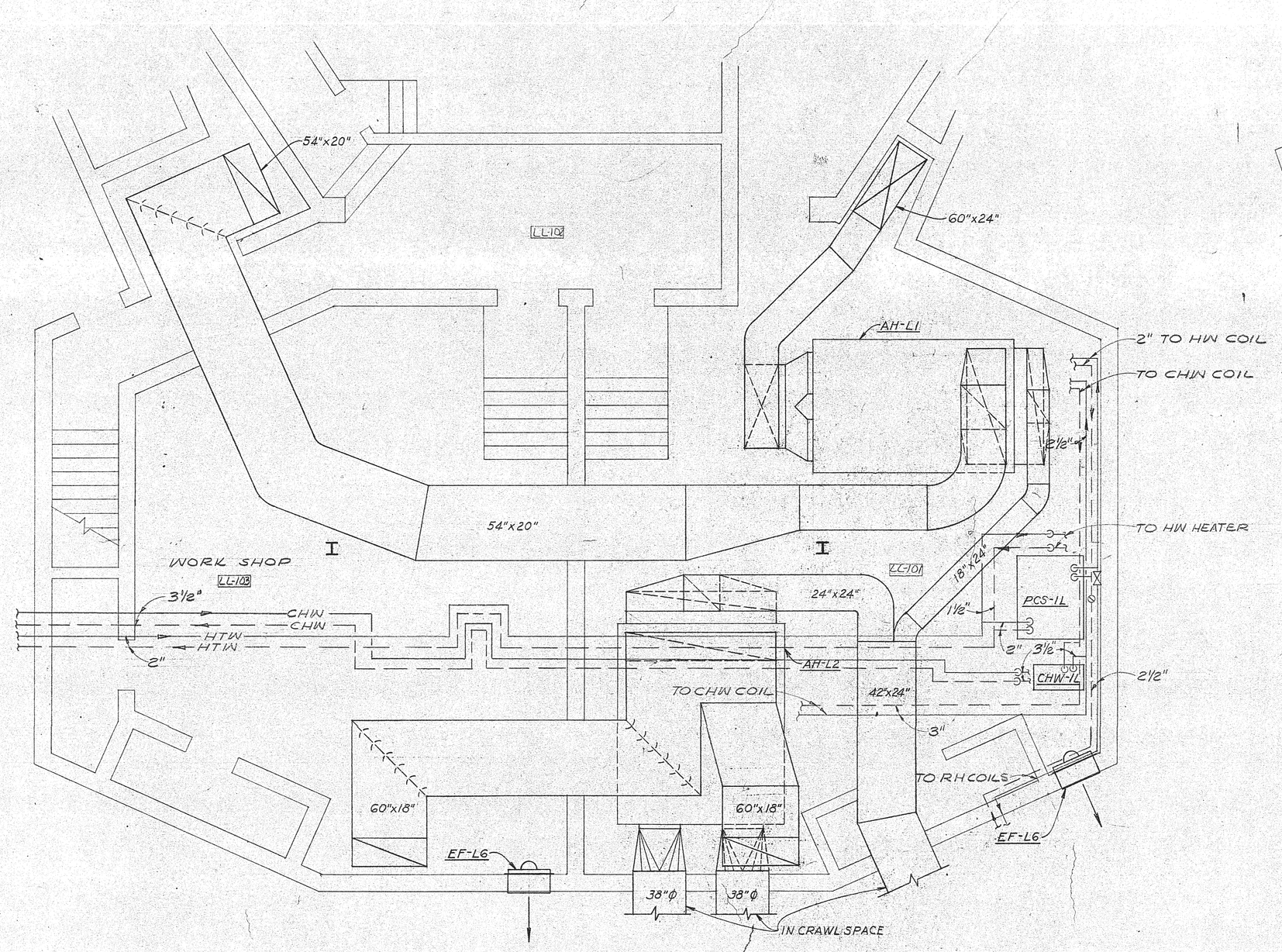

BASEMENT PLAN
SCALE: ¼"=1'-0"

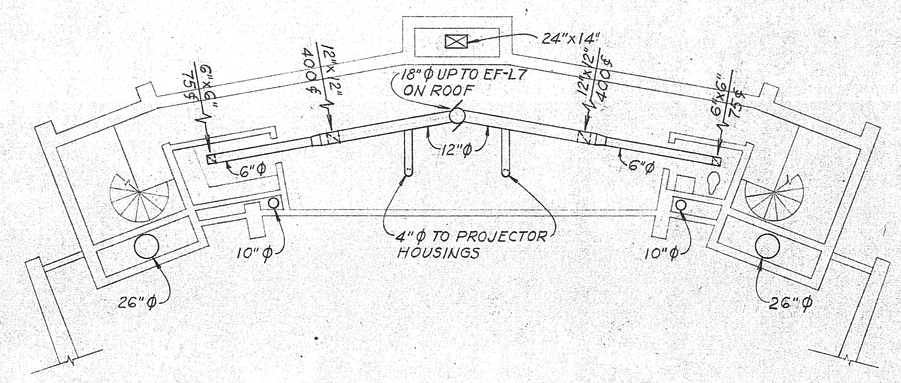

PROJECTION BOOTH PLAN
SCALE: ⅛"=1'-0"

REHEAT COIL SCHEDULE FOR BLDG. L

SYM	CFM	EA.-°F	LA.-°F	MBH	GPM @180°	REMARKS
RH-1	2190	55	100	105	11	
RH-2	3480	↓	↓	167	17	
RH-3	1475			71	8	
RH-4	1000			48	5	
RH-5	1025	↓	↓	49	5	
RH-6	3000	55	100	144	15	
	12,170					

MAX. COIL FACE VELOCITY - 750 FPM

GEORGIA REGISTERED PROFESSIONAL ENGINEER No. 853 ARCHITECT ROBERT HUNTER FELLERS

JONES AND ASSOCIATES
ARCHITECTS AND ENGINEERS
AUGUSTA, GEORGIA

GEORGIA RETARDATION CENTER
DEKALB COUNTY, GEORGIA
GEORGIA DEPARTMENT OF PUBLIC HEALTH

BUILDING L
PLANS & DETAILS
MECHANICAL

DSN.	R.S.F.	APPROVED BY	DWG. NO.
DWN.	R.L.P.		M-37
CHK.	P.J.H.		
JOB 655		DATE FEB. 1966	REVISION NO.

OF 42